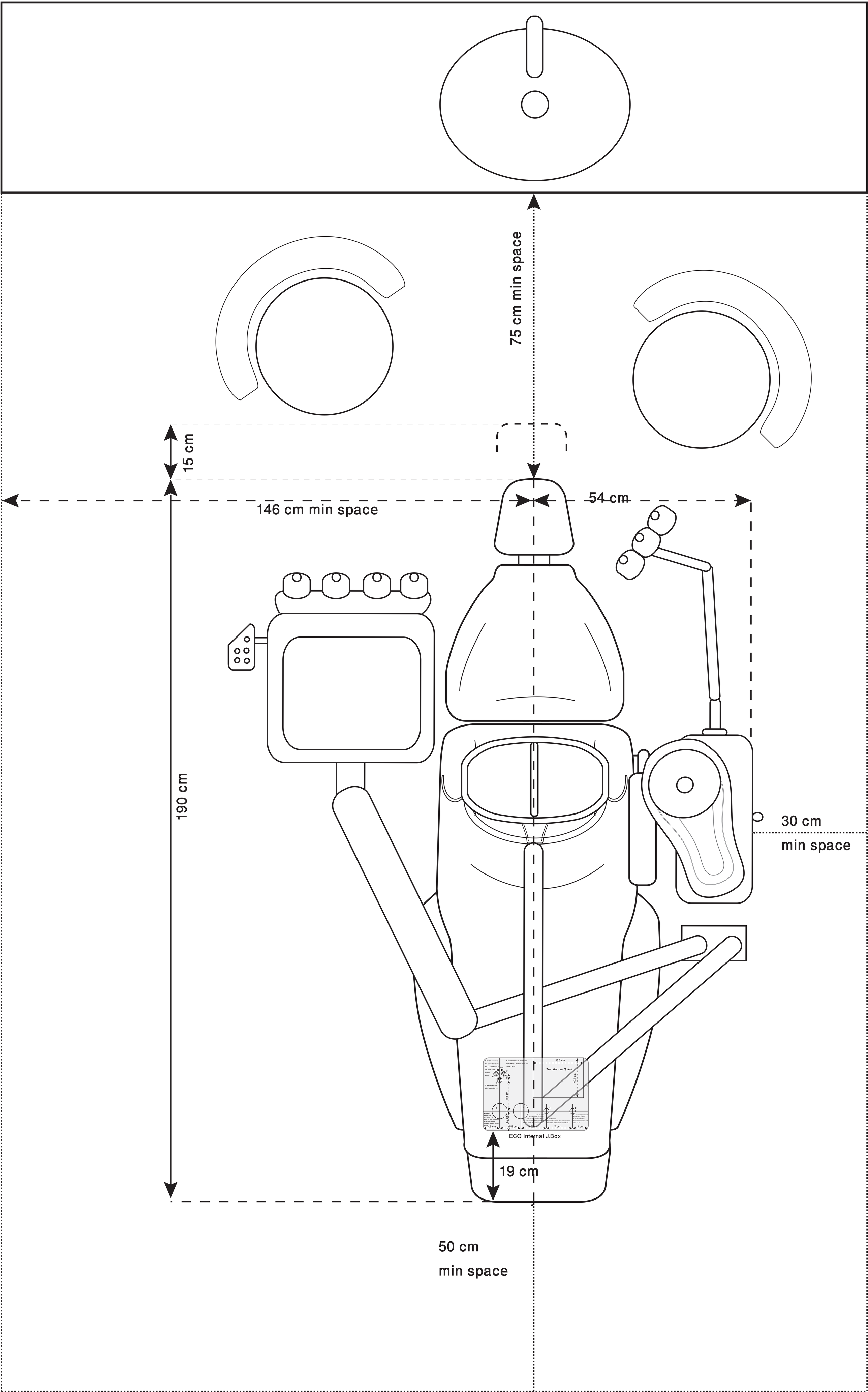
75 cm min space
15 cm
146 cm min space
54 cm
190 cm
30 cm
min space
Transformer Space
ECO Internal J.Box
19 cm
50 cm
min space